Table of Content 950800001

1. User manual

This instruction manual contains information and instructions to enable the user to work safely, correctly and economically on the unit. Understanding and adhering to the manual can help one:

- Avoid any dangers.
- Reduce repair costs and stoppages.
- Extend and improve the reliability and working life of the unit.

PLEASE ENSURE TO USE THE RIGHT VERSION OF THE INSTRUCTION MANUAL SUITABLE FOR YOUR UNIT.

Intended use
The unit is to be used exclusively for the dissipation of heat from control cabinets and enclosures (stationary, not moving) in order to protect temperature sensitive components in an industrial environment. To meet the conditions of use, all the information and instructions in the instruction manual must be adhered to.

General danger
Indicates compulsory safety regulations which are not covered by a specific pictogram such as one of the following.

High electric voltage
Indicates electric shock danger.

Important safety instruction
Indicates instructions for safe maintenance and operation of the unit.

Attention
Indicates possible burns from hot components.

Attention
Indicates possible damage to the unit.

Instruction
Indicates possible danger to the environment.

2. Legal regulations

Liability
The information, data and instructions contained in this instruction manual are current at the time of going to press. We reserve the right to make technical changes to the unit in the course of its development. Therefore, no claims can be accepted for previously delivered units based on the information, diagrams or descriptions contained in this manual. No liability can be accepted for damage and production caused by:

- Disregarding the instruction manual
- Operating error
- Inappropriate work on or with the unit
- The use of non-specified spare parts and accessories
- Unauthorised modifications or changes to the unit by the user or his personnel

The supplier is only liable for errors and omissions as outlined in the guarantee conditions contained in the main contractual agreement. Claims for damages on any grounds are excluded.

3. Safety instructions

Upon delivery the unit is already meeting current technical standards and can therefore be safely taken into operation. Only authorised personnel is allowed to work on the unit. Unauthorised personnel must be prohibited from working on the unit. Operating personnel must inform their superiors immediately of any malfunction of the unit.
Please note that before starting to work on or with the unit, a procedure must be carried out inside the cabinet on which the unit is to be mounted.
Before commencing work inside the cabinet, the control cabinet manufacturer's instruction must be read with regards to:

- Safety instructions.
- Instructions on taking the cabinet out of operation.
- Instructions on the prevention of unauthorised cabinet reconnection.

The electric equipment meets the valid safety regulations. One can find dangerous voltages (above 50 V AC or above 100 V DC)

- Behind the control cabinet doors.
- On the power supply in the unit housing.

The unit has to be operated according to the type plate and the wiring diagram, and must be protected externally from overloading and electrical faults via suitable protective devices.

Danger through incorrect work on the unit
The unit can only be installed and maintained by technical competent and qualified personnel, using only supplied material according to the supplied instructions.

Danger from electrical voltage
Only specialised personnel are allowed to maintain and clean the unit. The personnel must ensure that for the duration of the maintenance and cleaning, the unit is disconnected from the electrical supply.

Attention
Damage to the unit through the use of inappropriate cleaning materials. Please do not use aggressive cleaning material.

Instruction
Damage to the environment through unauthorised disposal. All spare parts and associated material must be disposed according to the environmental laws.

4. Technical data

Order Number	950800001
Cooling capacity L35L35 (EN14511-3)	850 W
Cooling capacity L35L50 (EN14511-3)	600 W
Compressor type	Rotary piston
Refrigerant / GWP	R134a / 1430
Refrigerant charge	140 g / 4.94 oz.
High / low Pressure	28 / 6 bar 406 / 87 psig
Operating Temperature Range	5°C - 55°C
Air flow volume (system / unimpeded)	Ambient air circuit: 850 m³/h Enclosure air circuit: 645 m³/h
Mounting	Roof mounted
Housing Material	Mild steel, powder coated
Dimensions A x B x C (D+E)	412 x 595 x 395 mm
Weight	32 kg
Voltage / Frequency	230 V ~ 50/60 Hz
Current L35L35	2.3 / 2.5 A
Starting current	6.0 A
Max. current	3.1 A
Nominal power L35L35	505 W
Fuse	15 A (T)
Short-circuit current rating	5 kA
Connection	4 pole connector for power 5 pole connector for signals 3 pole connector for RS 485 MODBUS
Ingress Protection	IP 54
Approvals	CE

5. Performance graph

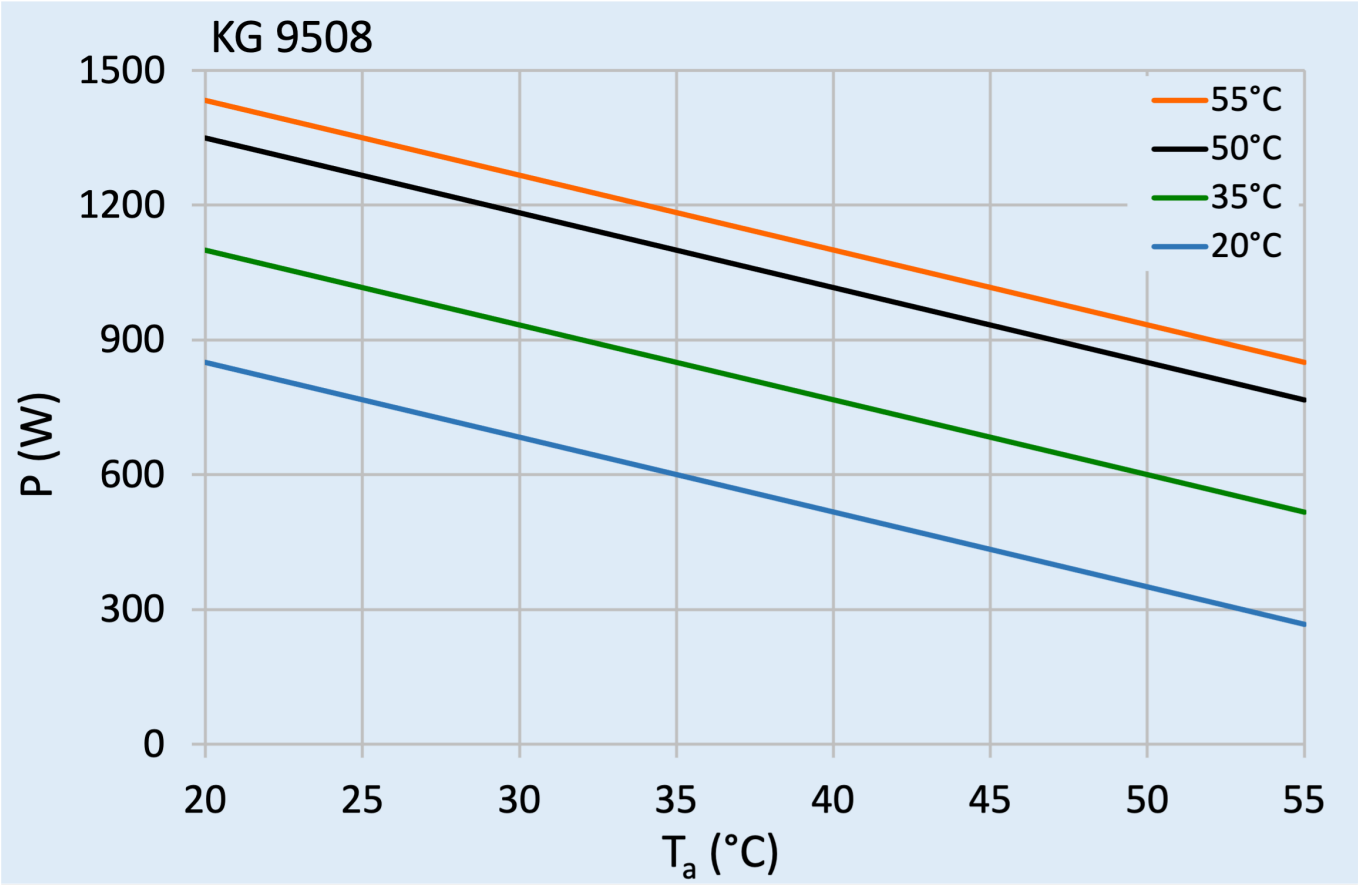

6. Mounting

Mounting preparations
Several points must be checked before the unit can be mounted. These checks must be made to ensure safety and the trouble-free operation of the unit. These checks must be carried out with absolute thoroughness to ensure that the unit works perfectly.

Check unit for transport damages
On delivery the carton box containing the unit must be examined for signs of transport damage. Any transport damage to the carton box could indicate that the unit itself has been damaged in transit which in the worst case could mean that the unit will not function.

Location and space requirements
The location of the cabinet must allow for sufficient air circulation to and from the unit.

Attention
Damage to the unit through incorrect mounting. The unit must be mounted according to the mounting template. It is therefore also important to check, with the help of a spirit-level, that the cabinet is in a horizontal position. The max. deviation from the vertical or horizontal is 3 degrees.

Air apertures
To provide adequate air circulation and avoid temperature layers from forming, ensure that air inlet and air outlet are not partially or completely blocked by obstructions in the cabinet. It must also be ensured in accordance with UL, that the air outlet is not blowing air directly at an equipment operator. Should this be the case a barrier or duct shall be provided to redirect the airflow.

Sealing
To guarantee that the unit works perfectly ensure that:

- the control cabinet is completely sealed to min. IP54 according to EN 60529
- a good seal exists between the control cabinet and the unit

Danger through high voltage

Ensure that for the duration of the mounting operation the cabinet is disconnected from the electrical supply. Therefore take the cabinet out of operation, following the relevant instructions, before mounting work begins and take all precautions to prevent premature reconnection of the cabinet. When all mounting preparations are complete the actual mounting operation can commence.

Use of mounting template
The supplied mounting template helps to mount the enclosure cooling units quickly. Please proceed as follows:

- Take the cabinet out of operation in the prescribed manner and secure it against unauthorized reactivation
- Fix the mounting template in the required position on the outer surface of the enclosure
- Drill the holes and cut the apertures in the required positions in the surface of the cabinet and remove the mounting template

Mounting the unit
Only use the supplied material to mount the unit on the cabinet. Proceed as follows to secure the unit on the enclosure:

- Set the unit up on the cabinet

- Screw the M6 hex. head screws together with the washers and locking washers into the M6 threaded rivets in the unit

The resistance of the earth connection between cabinet and cooling unit must be < 0.1 Ω.

7. Condensate management

High humidity and low temperatures inside enclosures will cause condensation on the evaporator. Condensate that drips into the enclosure can permantly damage sensitive electronics and lead to malfunction.

Seifert roof-mounted cooling units have an automatic electrical condensate evaporation with a self-regulating PTC heating element. Condensate that forms on the evaporator is collected in a container in the internal circuit. Depending on the amount, it reaches the heating element and evaporates. The heating element is permanently on. In the event of a malfunction, failure or excessive condensate formation, the condensate is drained from the side of the cooling via a drain socket

Note: The condensate container should be cleaned from time to time depending on the ambient conditions.

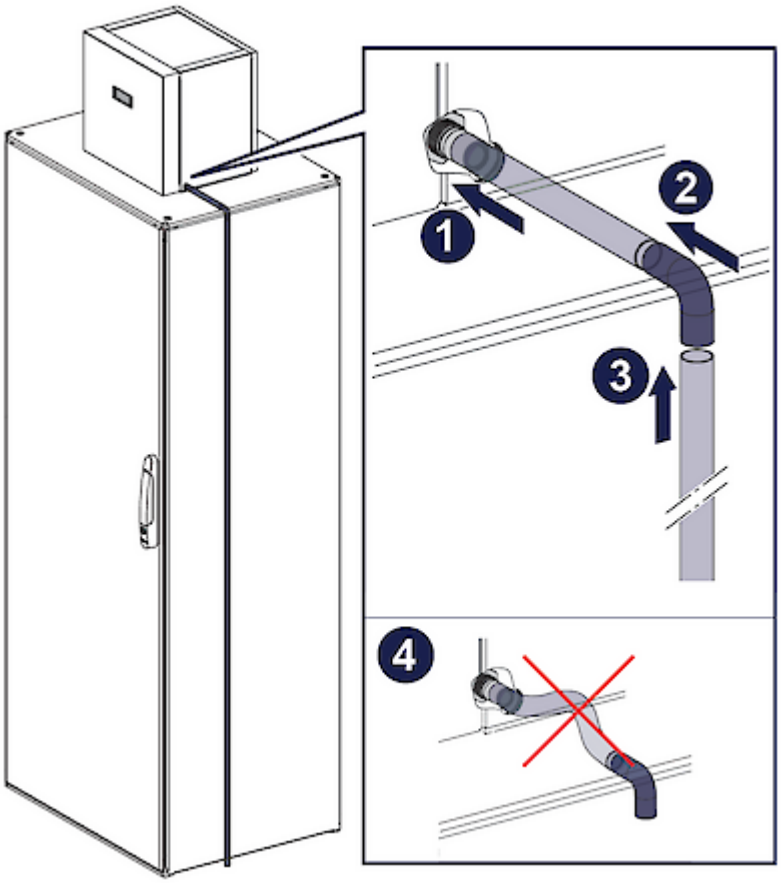

1. Cut a short section of the condensate drain hose and connect it to the drain connector on the side of the cooling unit.
2. Attach the plastic elbow to the other end.
3. Connect the remaining part of the condensate drain hose with the elbow and guide it to the side of the control cabinet to the floor.
4. The short part of the condensate drain hose must be laid with a constant gradient and without kinks.

In order to prevent excessive condensation, you should still check the cooling unit and enclosure seals regulary and consider installing a door contact switch (order no. 3100001).

8. Mounting Principle

1 Bolt M6*16 DIN933 A2
2 Lock Washer M6 DIN6798A
3 Washer A6.4 DIN125 A2
4 Enclosure
5 Mounting Gasket
6 Cooling unit
7 Lifting Hook M8*12 DIN580

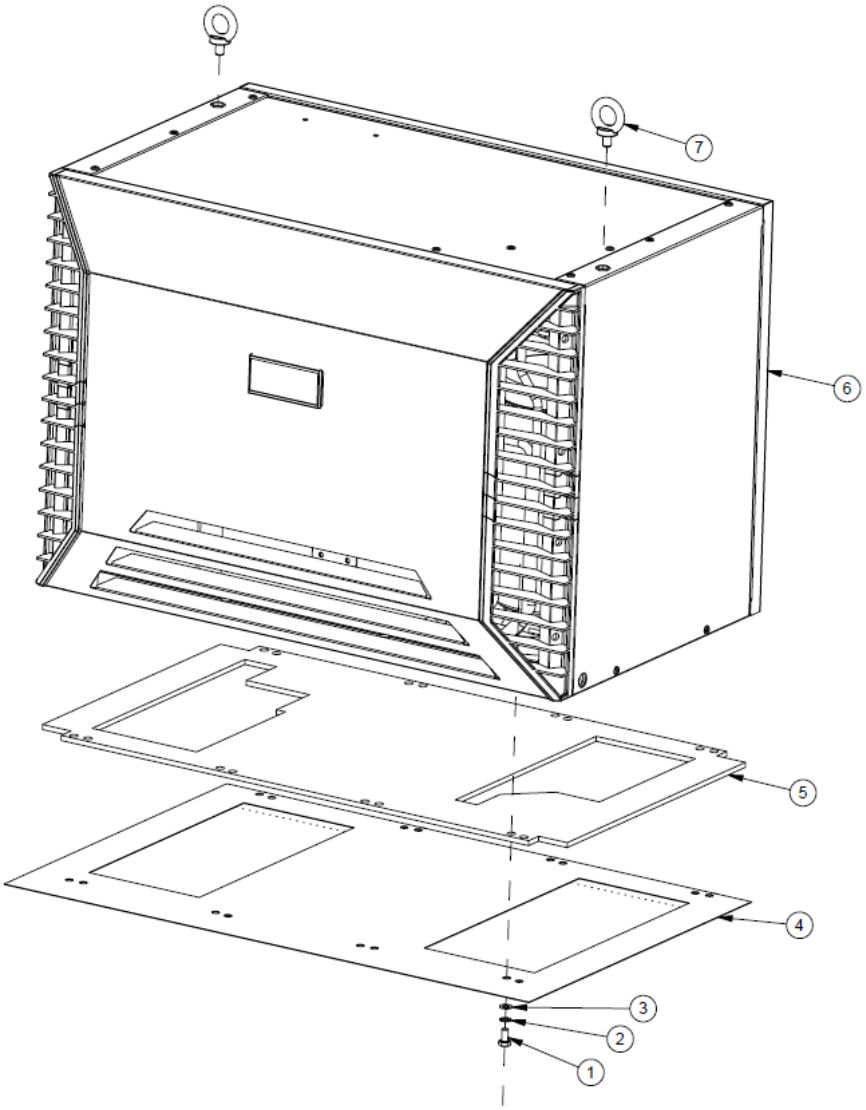

9. Cut Out Dimension

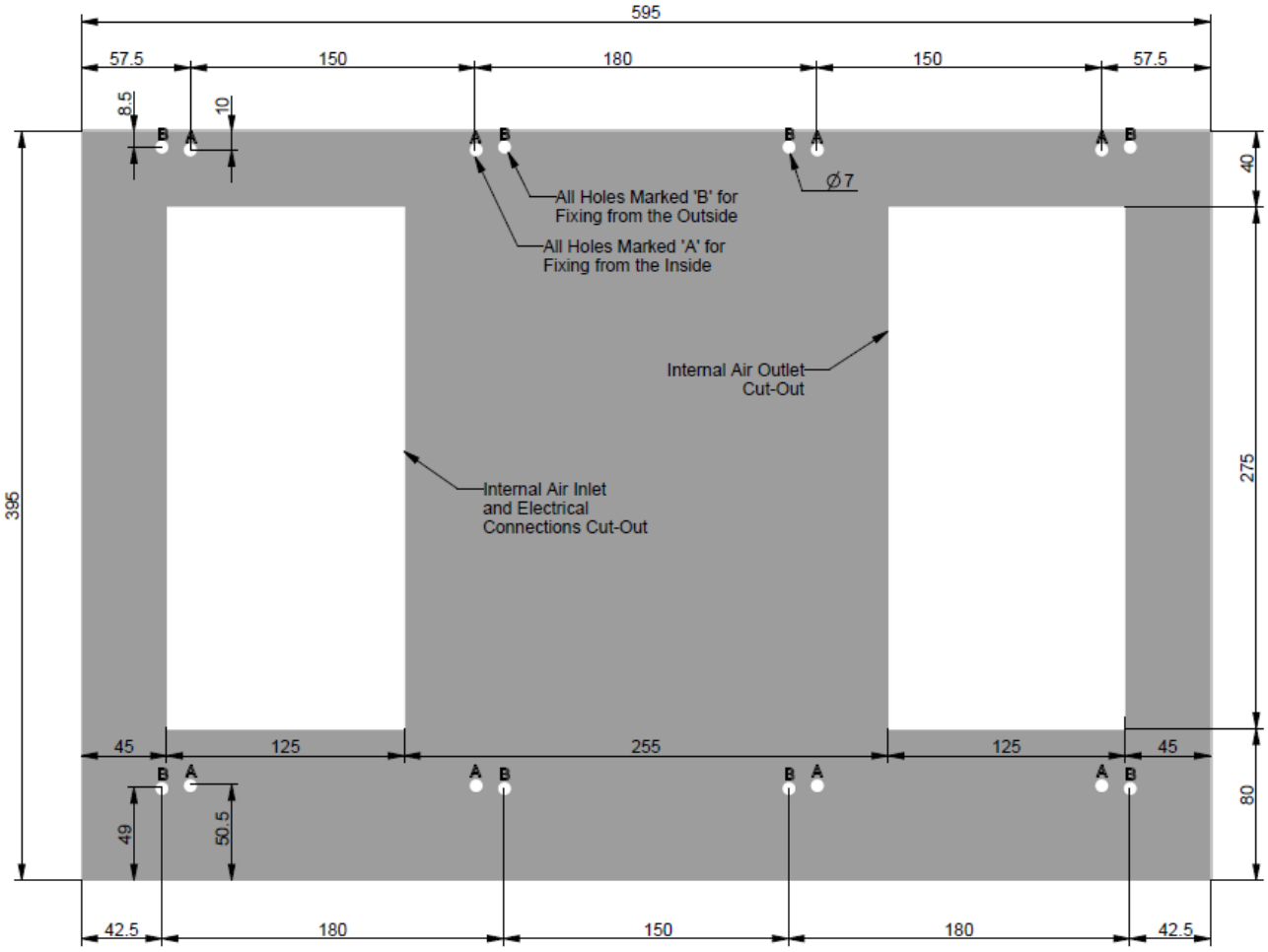

10. Electrical Connection

Caution, risk of death

Unconnected and / or faulty protective conductor systems can lead to dangerous voltages and electric shocks which can cause serious accidents.

Work on electrical connections may only be carried out by trained electrical engineers.

Door Switch
The unit can be switched ON and OFF via a door contact switch. When delivered the door contact terminals are bridged on the female connector. To connect the door contact switch remove the bridge and connect door contact switch. The contact must be closed when the cabinet door is closed.

Alarm Contacts
The alarm contacts have the following ratings:

30 VDC, 2 A resistive, 6k cycles, 125 VAC, 0.5 A resistive, 6k cycles

These contacts are not suitable for fluorescent loads (neon lights, etc.) that use starters (ballasts) with phase shifting capacitors. Fluorescent lamps with electronic controllers or without phase shifting capacitors can be used, depending on the operating limits specified for each type of relay.

On power-up, connectors P2 and P3 will remain shorted for the first 5 seconds, this is not an alarm condition but part of the boot sequence.

SCCR
Refer to UL508A Supplement SB and Seifert Systems' document Short Circuit Current Rating (SCCR) on methods how to modify the available short circuit current within a circuit in the panel.

11. Controller

When started, the display shows the internal temperature of the cooling unit and serves as the home menu for control.

Buttons	LED Functions
□ **Menu**	Blue LED: Steady On - Cooling mode
◯ **Set**	Blue LED: Blinking - min. compressor off time not elapsed
△ **Up**	Red LED: Steady On - Heating mode (opt.) Red LED: Blinking - Alarm
▽ **Down**	Rightmost digit – Master / Slave indicator

***i)* Operations from Home Screen:**

- Pressing △ or ▽ for 1 second will go to Menu 1. This will show the status of DI1, DI2, S1, S2, Onboard Sensor and total Alarms. Pressing △ or ▽ will toggle between sensors/digital inputs and alarms.
- Pressing □ will go to Menu 2.
- Any Alarms will appear on the Home Screen.
- If the Door Contact is Open, the Home Screen will show an OFF status.
- Pressing △ and ▽ simultaneously for 3 seconds will start Test Mode

***ii)* Operations from inside the Menus:**

- Pressing □ from any menu will return to the Home Screen.
- Pressing ◯ while in Menus 2/3 shows the parameter value.
- Pressing ◯ for 3 seconds while showing a parameter, will save the parameter.
- Pressing □ while showing a parameter, will return to the respective menu.

***iii)* Menu Access using passwords:**

- As standard, the user can only access Menus 1 and 2.
- When using the client password, the user is allowed access to Menu 3.
- This password can be set at any value between 0 and 9998.

All parameters are sorted in 3 separate menus.

Menu 1

Parameter	Description	Range
Sbrd	Onboard sensor Reading	-
S1	S1 Sensor Reading	-
S2	S2 Sensor Reading	-
d1	Digital Input 1 reading	0: Open 1: Closed
d2	Digital Input 2 reading	0: Open 1: Closed
AL1 - AL10	Alarms Counters for Alarm 1 to Alarm 10, (alarm description is described in table Alarm Codes below)	Alarm counts up to 250 per alarm

Menu 2

Parameter	Description	Input	Setting range
Ct_S	Control Setpoint	△ or ▽ to Increase/Decrease Temperature	Min: ccS1 Max: ccS2
HA_S	High Alarm Setpoint	△ or ▽ to Increase/Decrease Temperature	Min: HAS1 Max: HAS2
LA_S	Low Alarm Setpoint	△ or ▽ to Increase/Decrease Temperature	Min: LAS1 Max: LAS2
Ht_S	Heater Setpoint	△ or ▽ to Increase/Decrease Temperature	Min: HS1 Max: HS2
C_F	Celsius / Fahrenheit	△ or ▽ to change between ºC and ºF	C: Celsius F: Fahrenheit
IP_1	Input 1 Invert	△ or ▽ to changes between NC/NO door contact	0: NC 1: NO
StAt	System State	Read Only	OFF: Off dL: Idle CL: Cooling Ht: Heating tSt: Test
OUtP	Relay Outputs	Read Only	H: Heater Relay A: Ambient Blower relay C: Compressor Relay
PASS	Password	△ to increase number and ▽ to change digit An incorrect Password will reset the input to 0 The correct password opens MENU 3	Any number between 0 and 9999

Menu 3

Parameter	Description	Input	Setting range
Add	Modbus Address	△ or ▽ to increase or decrease Modbus address	Any number between 1 and 254
SLoc	Setpoints Lock	△ or ▽ to change between Locked/Unlocked	0: Unlocked 1: Locked
CPSS	Change Password	△ to increase number and ▽ to change digit	Any number between 0 and 9998
MS1	Master Enable	Master On/Off	ON: Master On OFF: Master Off
MS2	Master Mode	△ or ▽ to change Master Mode	NONE: None IDN: Identical Mode PR: Power Mode
MdL	Power Mode Delta Temperature	△ or ▽ to increase or decrease temperature	Min: 0 Max: 9999
rS1	Redundancy Mode	△ or ▽ to change between Redundancy Modes	NONE: None A: Redundancy Mode A B: Redundancy Mode B
rS2	Redundancy Start-up	△ or ▽ to increase starting units	Min: 1 Max: 10
rS3	Redundancy Timeout	△ or ▽ to increase time (Minutes)	Min: 0 Max: 9999

Alarm codes

Alarm Code	Description
AL1 - HI	High Temp Alarm
AL2 - LO	Low Temp Alarm
AL3 - PrEP	Pressure Pipe Alarm
AL4 - AbS	Ambient Sensor Faulty
AL5 - PPS	Pressure Pipe Sensor Faulty
AL6 - ICES	Ice Sensor Faulty
AL7 - InS	Internal Sensor Faulty
NA	*Not Available*
AL9	*...Check 'Digital Input 2' Table below*
AL10 - ICE	Ice Algorithm Active
AL11 - SLOC	Incorrect Sensor Location

Digital Input 2 Table

dIn2	Generic Error
PH_F	Phase Failure
Pr_S	Pressure Switch
FL_S	Float Switch

Test mode

- Test mode is started by simultaneously pressing △ and ▽ for 3 seconds.
- When Test run is active, tESt will be shown blinking on the display.

Test procedure when Internal Temperature is between 10°C and 49°C.

0 - 30 seconds	Ambient blower
30 seconds - 5:30 minutes	Ambient blower + compressor
5:30 - 6:30 minutes	Ambient blower + heater

Master / Slave and Redundancy Functionality

i) Master / Slave Mode - Specifications

- Network of maximum 10 units.
- The Modbus addresses of the units need to be set manually.
- Unit addresses need to be between 1 and 10.
- The Master unit must be set with Address 1. When setting a master, an extended menu opens to set the Master/Slave and Redundancy modes.
- The Master unit is the unit which controls all the Master/Slave and Redundancy Operations.
- The Client only needs to set the Master, the other units (addresses 2 to 10) do not need to be set and will convert to Slaves automatically. For a unit to be a slave and included in the network, an address between 2 and 10 needs to be pre-set.
- When communication with the Master is lost, all Slaves will return to normal mode.
- Setting the number of units in the network is not required as the Master will try to communicate with all Slaves (units 2 to 10), but operates the algorithm based on the online units.
- Every pre-defined time, the Master unit will try to communicate with the Offline Units.
- If a Slave is in an alarm condition, the Master will power the Alarm LED, but does not show the Alarm code.
- The system can operate in Master/Slave only, Master/Slave + Redundancy or Redundancy Only.
- If a unit needs to operate in Heating Mode, any Master/Slave/Redundancy operation is ignored. If the Master needs to operate in Heating Mode, the Slaves continue to operate in Master/Slave/Redundancy mode and enter cooling mode if necessary. The algorithm for the slaves will still be controlled by the Master, although the Master may possibly be in heating mode.
- The Master can only be enabled via the Display or via Gateway. It can be enabled via Modbus, but for the Gateway operation only rather than for Client use and a Modbus Controller will not be able to communicate with the units anymore. The Seifert Gateway acts as a Slave in the Master/Slave network and will still be able to communicate with the Master.

When a network is in MSR mode, the flashing of the 4th digit dot (right most digit), indicates the status of the unit in the MSR status. Below is a table describing the flashing based on the unit status.

Master Unit	Continuous blinking	**1**0**1**0**1**0**1**0**1**0**1**0**1**0**1**0**1**0**1**0**1**0**1**0
Slave Unit	Blinking 2x and pause	**1**0**1**000000000000**1**0**1**000000000
Master Unit Redundant	Blinking 3x and pause	**1**0**1**0**1**000000000**1**0**1**0**1**000000000
Slave Unit Redundant	Blinking 4x and pause	**1**0**1**0**1**0**1**000000000**1**0**1**0**1**0**1**000000000

Master settings

Display	Description
MS1	Master On/Off
MS2	Master Modes: None, Identical, Power
MdL	Power Mode Delta Temperature

MS2: Master Modes

None:

- All units are Independent of each other.
- Each unit operates using its own setpoint and its own Internal Temperature.
- The Master still communicates with the Slave units to gather information in case information needs to be communicated to the Gateway.

Identical Mode:

- All units operate as one single unit.
- The Master operates using the Maximum Internal Temperature in the network, and the Slaves follow the operation of the Master.
- In this mode, the client needs to only set the Master setpoints.
- If a Slave needs to execute the heating mode, Master/Slave operation is ignored.
- If the Master needs to execute the heating mode, the Slaves will keep operating on the Maximum Internal Temperature of the network.

Power Mode:

- All units operate using the Master Setpoints but using their own Internal Temperature.
- If any unit Internal Temperature exceeds the Master Control Setpoint + Delta, the Master takes back control of all the Slaves and operation is changed to Identical Mode.
- If all Internal Temperatures fall below the Master Control Setpoint, control is released from the Master and the Slaves will operate Independently based on their own Internal Temperature whilst using the Master Setpoints.
- If a Slave needs to operate in heating mode, Master/Slave operation is ignored.
- If the Master needs to operate in heating mode, the Slaves will keep operating on the Maximum Internal Temperature of the network.

ii) Redundancy Mode

Redundancy settings

Display	Description
rS1	Redundancy Modes: None, Mode A, Mode B
rS2	Start-up Mode
rS3	Changeover Timeout in Minutes

RS1: Redundancy Modes:

None:
No redundancy, all units operate normally

Mode A:
In this mode, there will be 2 sets of units, and they will toggle between each other after a pre-defined time. The start-up units are settable.

Below is an example, starting with Units 1 to 4 ON (Grey ON, White OFF)

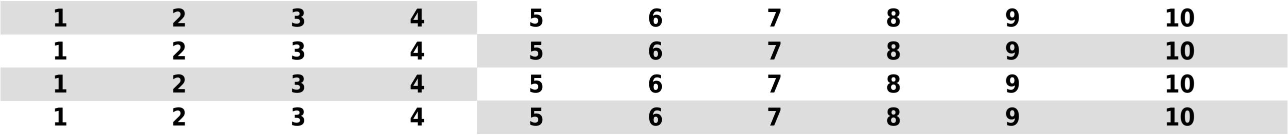

1	**2**	**3**	**4**	**5**	**6**	**7**	**8**	**9**	**10**
1	**2**	**3**	**4**	**5**	**6**	**7**	**8**	**9**	**10**
1	**2**	**3**	**4**	**5**	**6**	**7**	**8**	**9**	**10**
1	**2**	**3**	**4**	**5**	**6**	**7**	**8**	**9**	**10**

Mode B:
In this mode, the system will ‘move’ one unit at a time after the pre-defined time.

Below is an example, starting with Units 1 to 4 ON

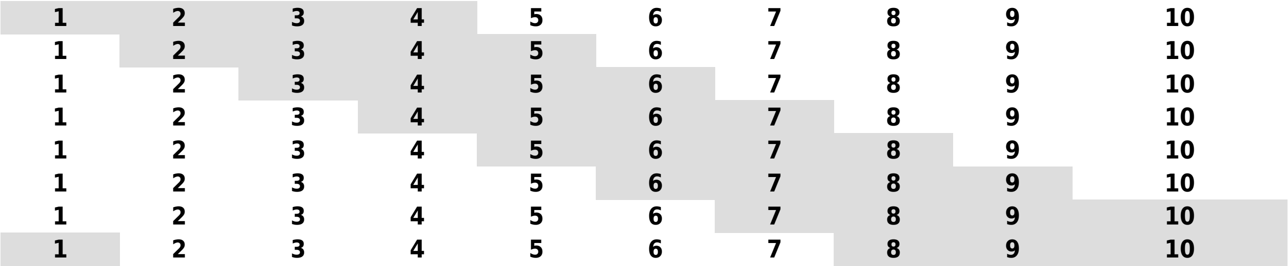

1	**2**	**3**	**4**	**5**	**6**	**7**	**8**	**9**	**10**
1	**2**	**3**	**4**	**5**	**6**	**7**	**8**	**9**	**10**
1	**2**	**3**	**4**	**5**	**6**	**7**	**8**	**9**	**10**
1	**2**	**3**	**4**	**5**	**6**	**7**	**8**	**9**	**10**
1	**2**	**3**	**4**	**5**	**6**	**7**	**8**	**9**	**10**
1	**2**	**3**	**4**	**5**	**6**	**7**	**8**	**9**	**10**
1	**2**	**3**	**4**	**5**	**6**	**7**	**8**	**9**	**10**
1	**2**	**3**	**4**	**5**	**6**	**7**	**8**	**9**	**10**

Setting rS2, Start-up Mode, indicate the number of units to start when redundancy is active (Mode A/B). If the setting is set to 4, this means that on the first cycle, unit 1 to 4 are switched ON. If setting is set to 4 but unit 2 is offline, on the first cycle, units 1, 3, 4, 5 are ON.

- Setting rS3, Changeover Timeout, indicates the duration of each cycle. This can be a value from 1 to 9999 minutes.
- If a Slave needs to execute heating mode, Redundancy operation is ignored.
- If the Master needs to execute heating mode, the Slaves will keep operating based on the Redundancy Algorithm.
- The redundancy time increases only if there is at least one active (non-redundant) unit cooling from the active units group.
- The changeover between units happens only if no active unit is cooling.

Modbus Communication

Detailed instructions on Modbus communication can be found in the link below.

https://seifertsystems.com/site/assets/files/6903/rdtg2001-0_2_-_generic_modbus_table.pdf

Further notes:

- From Modbus side, any setting can be with 0.1°C precision. From the display, the precision is 0.5°C. When having a setting, example 30.4°C, this will be rounded to 30.5°C when accessed via display.
- When Ambient, Icing and Pressure are not enabled, the value displayed (Modbus) is -50°C.
- When saving settings via communication, **"S"** is shown on display for 1 second.
- When system goes in Cooling Mode, **"C"** is shown on display for 1 second.
- When system goes in Heating Mode, **"H"** is shown on display for 1 second.
- When accessing the Display Settings of Menu 2/3, any settings from Modbus are ignored.
- When running a test with the door contact open, the display only shows TEST, since the unit will not be OFF.
- When running a test with Alarms, the Alarms and TEST are shown together.
- When unit is **not** Modbus Address 1, the Master/Slave and Redundancy parameters are hidden from Menu3 when using Client Password. (MS1, MS2, MdL, rS1, rS2, rS3).
- The Blue LED is ON when the unit is cooling.
- A red LED is ON when the unit is heating.
- The red LED flashes when an alarm is present.

12. Wiring Diagram

NOTES:
1) Use supply wires suitable for 75°C (167°F)
2) Use copper conductors only.
3) Optional components marked with dashed lines.
4) X4 used for 230V units only.
5) X5 used for 115/400-460V units only.
6) MA2 used for 4kW (13650BTU) units only.

X1 ELECTRICAL SUPPLY CONNECTION
(see unit typeplate for unit voltage)
115/230V - 1:L1 (115/230V), 3:N
400V - 2:LX *(400V)*, 3:L2 *(400V)*
460V - 1:L1 *(460V)*, 3:L2 *(460V)*

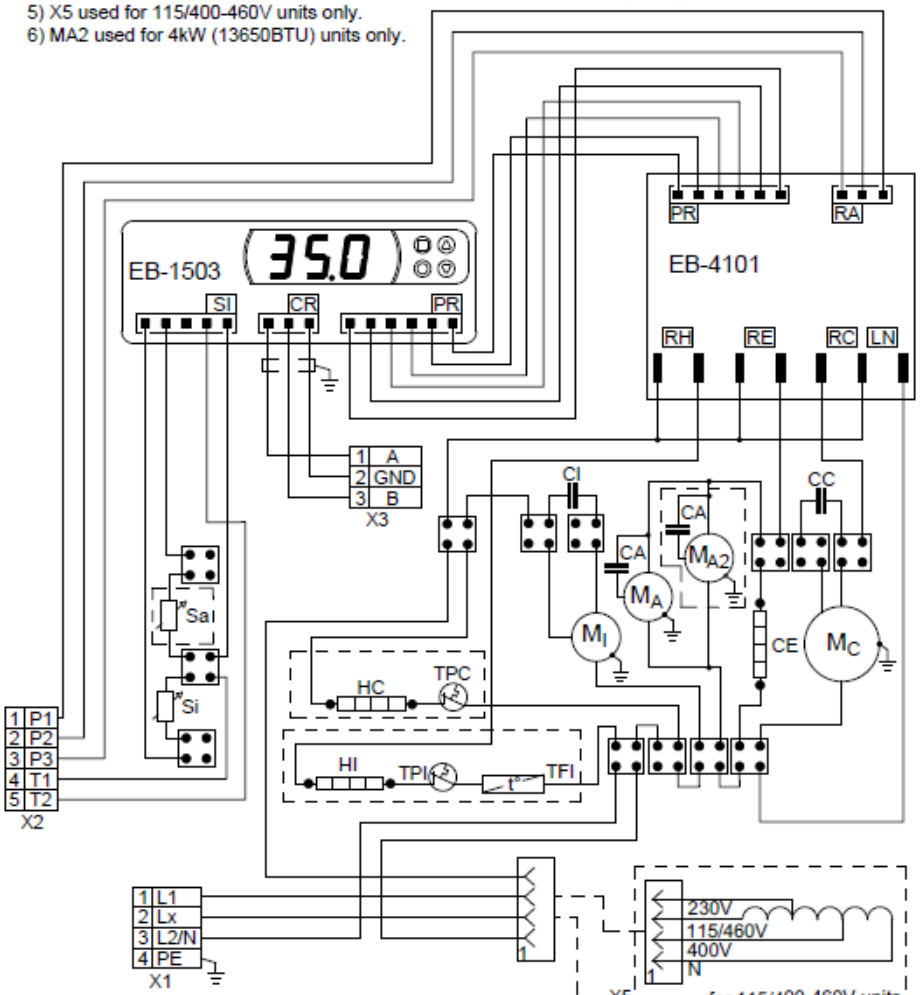

COMPONENTS:

X1: Power connector
X3: RS485 connector
X5: Auto transformer
Ci: Capacitor for Mi
Ca: Capacitor for Ma
Cc: Capacitor for Mc
Sa: Ambient temp sensor
TPI: Thermal protector (85°C)
HC: Compressor heater
CE: Condensate heater

X2: Signals/Alarm connector
X4: 230V jumper
Mi: Internal fan
Ma: Ambient fan
Mc: Compressor
Si: Internal temp. sensor
HI: Internal heater
TFI: Thermal fuse (102°C)
TPC: Thermal protector (85°C)

5960030785 / a

13. Taking into Operation

Attention!
The unit can be damaged by lack of lubricant. To ensure that the compressor is adequately lubricated the oil, which has been displaced during transport, must be allowed to flow back into it. The unit must therefore be allowed to stand for at least 30 min. before being connected to the mains and taken into operation.The unit / system must be protected with a MCB Type D or K.

Upon connection the internal and external fans will start working. The external fan turns off after 3 minutes, but the internal fan stays on. If the temperature inside the enclosure is higher than the set value of the controller both the compressor and external air fan start working. The cooling cycle will either stop once the air inside the enclosure reaches the set temperature minus hysteresis or once the minimum On-time is reached. The setpoint for the internal enclosure temperature is pre-set at 35°C.

The hysteresis is 3K, the minimum ON-time is 4 minutes, the minimum OFF-time is 3 minutes, for units with a cooling capacity of more than 1 kW is it usually 7 minutes.

14. Trouble Shooting

Failure	Reason	Troubleshooting
Unit doesn't start	No power supply	Check the electrical connection
	Cabinet temperature is lower than set point	Wait until the set point is reached. The unit will then start automatically. If the set point of the cabinet temperature is too high, reduce it accordingly.
	Door contact is open	Close the cabinet door or bridge the door contact.
Unit doesn't cool	Compressor is faulty	Please get in contact with one of our service partners.
	The circuit breaker of the compressor got activated	Check the cooling capacity. In case the cooling capacity is too small, install the unit at a different place or add another cooling unit.
	The evaporator and / or condenser are extremely dirty.	Evaporator and /or condenser need cleaning
Evaporator is iced up	Not enough refrigerant due to leaking cooling circuit	Refill refrigerant and re-seal cooling circuit. Please contact the manufacturer.
	Ambient temperature is much lower than the stated operating temperature range	Install the unit at a different place. The ambient temperature must be within the stated operating temperature range.
	The control cabinet is not sealed properly.	The control cabinet needs re-sealing.
	Fan or fan capacitor on the cold side are faulty	Replace fan and/or fan capacitor.
Too much condensate	Cabinet door not closed	Ensure that cabinet door is closed properly
	The cabinet is not sealed properly	The control cabinet needs re-sealing.
	Incomplete gasket between cooling unit and cabinet	Please check gasket
Uneven air circulation inside the cabinet	Cabinet air intake and air outlet are blocked	Ensure that both are unblocked and that air can circulate
	Cabinet volume too big for this cooling unit	Check the cooling capacity. In case the cooling capacity is too small, install the unit at a different place or add another cooling unit.
Condenser fan doesn't work	Fan is faulty	Replace fan
Evaporator fan doesn't work	Fan is faulty	Replace fan

Note: Before you contact one of our service partners please press the test button of the controller. Like this the fans and the evaporator are getting switched on independent of the internal cabinet temperature. In cases of emergency you can contact us under one of the tel. numbers stated on the last page.

15. Maintenance & Cleaning

Danger from electrical voltage
Maintenance and cleaning must be carried out by specialists (electricians). The personnel must ensure that for the duration of this work the unit and the cabinet are disconnected from the electrical supply and protected against unauthorised reactivation.

Danger through incorrect work on the unit
The instructions in the cabinet manufacturer's manual must be read.

Damage to the unit through incorrect maintenance and repair.
Maintenance and repair of the refrigerant circuit must be carried out by the manufacturer or another specialist.

Unit service and cleaning
All units are virtually maintenance-free.
Note: Please check on our website under download / service and maintenance for our new videos.

The following points must be taken into account:
The service and cleaning of the unit must be undertaken by specialists. The personnel must ensure that for the duration of the cleaning work the unit and the cabinet are disconnected from the electrical supply and protected against unauthorized reconnection. The connections 1&2 and 3&4 are not low voltage (<50V).

- Regularly check the condenser profile for dirt (approx. every 2,000 hours depending on the grade of ambient pollution).

Should the condenser need cleaning:
Disconnect the whole plant from the mains.

- Clean the condenser profile as required by blowing it out with compressed air.
- In cases of extreme pollution a cleaning fluid must be used.

Danger from electrical voltage.

The unit must be removed from the control cabinet for wet cleaning! **Instruction:** Never use aggressive cleaning fluids or materials.

Should fluid cleaning be necessary:
Disconnect the whole plant from the mains

- Remove the unit from the cabinet
- Ensure that the seals are not damaged
- Remove the radial fan
- Steam-clean the condenser profile or wash it with an environmentally safe cleaning fluid**.**

Instruction: After cleaning and drying the unit, there must be a 2 hours delay before the unit is taken back into operation.

16. Maintenance

Attention! Only use original replacement parts when repairing the unit. This ensures that the unit functions perfectly and remains safe. For further information and spare part ordering please contact us by email under *on one of the addresses stated on the last page.*

Radial fan replacement: The normal working life of the fan is app. 40,000 working hours under normal conditions. Should you still need to change the fan, please take note of the following:

Danger from electrical voltage
Maintenance work on the unit must be carried out by specialists (qualified electricians). The personnel must ensure that for the duration of the work the unit and the cabinet are disconnected from the electrical supply and protected against unauthorized reconnection.

- Disconnect the unit from the mains
- Remove the unit cover
- Remove the fixing screws from the relevant fan
- To replace the cold side fan the PC-board must also be removed
- Disconnect the fan cable from the PC-board
- Mount a new radial fan

Danger to the unit through incorrect work.
Make sure that the cabinet fan or the ambient fan are not misplaced in the unit as they are different. Ensure that the correct polarity is maintained. The fans should have clockwise rotation.

- Replace the 4 fan fixing screws
- Connect the fan cable to the PC-board and replace the board if necessary

Dispose the old fan according to the environmental laws and regulations.

17. Transport & Storage

Malfunction due to transport damage
On delivery the carton box containing the unit must be examined for signs of transport damage. Any transport damage to the carton box could indicate that the unit itself has been damaged in transit which in the worst case could mean that the unit will not function.
The unit can only be stored in locations which meet the following conditions:

- temperature range: - 40°C to 70°C
- Relative humidity (at 25°C): max. 95 %

Returning the unit
To avoid transport damage the unit should be returned in the original packing or in a packing case and must be strapped to a pallet. If the unit cannot be returned in the original packing please ensure that:

- A space of at least 30 mm. must be maintained at all points between the unit and the external packing.
- The unit must be firmly fixed in the packing.
- The unit must be protected by shock resistant padding (hard foam corner pieces, strips or cardboard corner pieces).

18. Parts supplied / Spare parts / Accessories

Description	QTY	Image
Instruction manual	1	
CE Declaration	1	
Lifting hook M8.12	2	
Bolt M6*16 A2	10	
Washer A6.4	10	
Toothed washer M6 A2	10	
Slotted set screw M6_25	2	
3 - pole terminal block for RS 485	1	
4 - pole terminal block for electrical connection	1	
5 - pole terminal block for signals	1	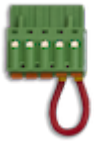
Nylon elbow connector	1	
PVC Hose 10 x 13mm	2.5 m	

Seifert Systems GmbH
Albert-Einstein-Str. 3
42477 Radevormwald
Germany
Tel.+49 2195 68994-0
info.de@seifertsystems.com

Seifert Systems Ltd.
HF09/10
Hal-Far Industrial Estate
Birzebbuga, BBG 3000
Malta
Tel.+356 2220 7000
info@seifertsystems.com

Seifert Systems AG
Wilerstrasse 16
4563 Gerlafingen
Switzerland
Tel.+41 32 675 35 51
info.ch@seifertsystems.com

Seifert Systems GmbH
Bärnthal 1
4901 Ottnang
Austria
Tel.+43 7676 20712 0
info.at@seifertsystem.com

Seifert Systems Ltd.
Rep. Office
26100 Cremona
Italy
Tel.+39 349 259 4524
info@seifertsystems.com

Seifert Systems Inc.
75 Circuit Drive
North Kingstown
RI 02852
USA
Tel.+1 401-294-6960
info.us@seifertsystems.com

Seifert Systems Pty Ltd.
105 Lewis Road
Wantirna South
3152 Victoria
Australia
Tel.+61 3 98 01 19 06
info@seifertsystems.com.au